GLOBE VALVE CAST STEEL ANGLE DIN 3202 F32, PN 6

Материал steel 1.0619; DIN GS-C25
Налягане PN 6
Размер DN 15 - 300

DESCRIPTIONS

Globe valve with shut off or screw down non return (SDNR) function. Metal sealing. Rising stem type.

MEDIA

- Fuel oil, lubricating oil and flammable hydraulic oil. Cargo oil. Non-flammable hydraulic fluid.
- Boiler feedwater, condensate. Seawater and freshwater.

VARIANTS

Regulating disc.
Screw down non return discs - SDNR

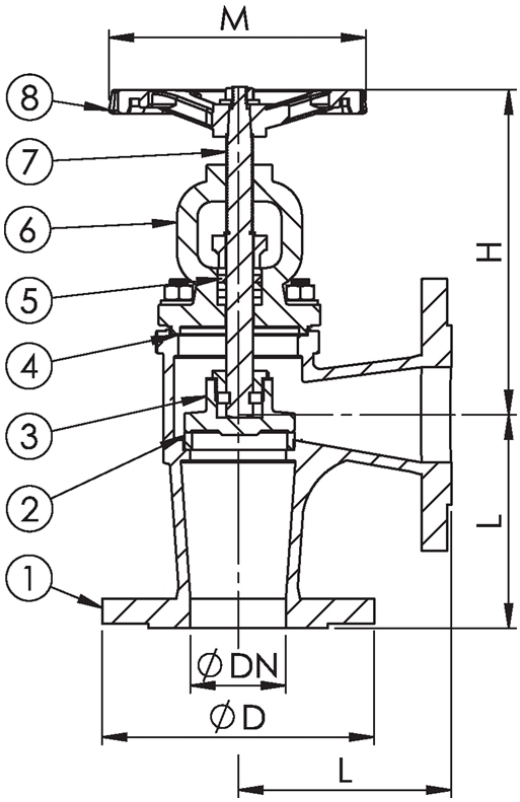

No.	Part	Material
1	Body	Cast Steel 1.0619 (WCB)+13Cr
2	Seat	Cast Steel 1.0619 (WCB)+13Cr
3	Disc	Cast Steel 1.0482 (A105)+13Cr
4	Gasket	SS+Graphite
5	Gland packing	Graphite
6	Bonnet gasket	Cast Steel 1.0619 (WCB)+13Cr
7	Stem	Stainless steel EN 1.4021 2Cr13
8	Handweel	Ductile iron EN-JS1025 (GGG40.3)

Specifications	
Standart:	DIN 3202 F1
Flange standard:	EN1092-2
Face to face standard:	EN558, Series 1
Bonnet connection:	Bolted
Execution:	Angle
Connection type:	Flanged
Operation:	Handwheel
Actuation:	Multiturn
Tmax	From -29 °C to 425°C

Dn	Pressure rating	Connection	L	D	P	N x d	H	M	Weight (kg)
15	6	6	90	80	55	4 x 11	165	120	4,5
20	6	6	95	90	65	4 x 11	165	120	5,5
25	6	6	100	100	75	4 x 11	180	140	7
32	6	6	105	120	90	4 x 14	180	140	9

ИНКОВЕС ЕООД промишлена спирателна и регулираща арматура

тел. 052 725 370, 371, 372;
факс.: 052 511 246
www.incoves.com

моб.: 0886 400 992
e-mail: office@incoves.com

Адрес: Централен офис - складова база
Варна, Западна промишлена зона, ул. "Перун" 1

11/12/2024

GLOBE VALVE CAST STEEL ANGLE DIN 3202 F32, PN 6

Материал steel 1.0619; DIN GS-C25
Налягане PN 6
Размер DN 15 - 300

Dn	Pressure rating	Connection	L	D	P	N x d	H	M	Weight (kg)
40	6	6	115	130	100	4 x 14	215	160	12
50	6	6	125	140	110	4 x 14	230	160	16
65	6	6	145	160	130	4 x 14	245	180	22,1
80	6	6	155	190	150	4 x 18	295	210	27,2
100	6	6	175	210	170	4 x 18	325	225	44
125	6	6	200	240	200	8 x 18	360	250	70
150	6	6	225	265	225	8 x 18	425	300	92,5
200	6	6	270	320	280	8 x 18	505	400	178

тел. 052 725 370, 371, 372; моб.: 0886 400 992 Адрес: Централен офис - складова база
факс.: 052 511 246 e-mail: office@incoves.com Варна, Западна промишлена зона, ул. "Перун" 1
www.incoves.com