GLOBE VALVE CAST STEEL STRAIGHT DIN 3202 F1, PN 16

Материал steel 1.0619; DIN GS-C25
Налягане PN 16
Размер DN 15 - 200

DESCRIPTION

Globe valve straight type, flanged connection with shut off, screw down non return (SDNR) or regulating function. Metal sealing. Rising stem type.

MEDIA
- Steam. Fuel oil, lubricating oil and flammable hydraulic oil. Cargo oil. Air. Non-flammable hydraulic fluid. Boiler feedwater, condensate.
- Seawater and freshwater.

VARIANTS

- Regulating disc.
- Screw down non return discs - SDNR

OPTIONS
- Spring for SDNR.

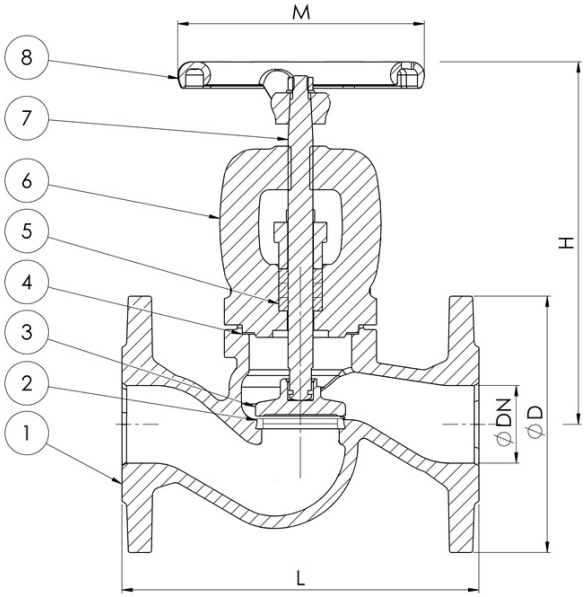

No.	Part	Material
1	Body	Cast Steel 1.0619 (WCB)+13Cr
2	Seat	Cast Steel 1.0619 (WCB)+13Cr
3	Disc	Cast Steel 1.0482 (A105)+13Cr
4	Gasket	SS+Graphite
5	Gland packing	Graphite
6	Bonnet	Cast Steel 1.0619 (WCB)+13Cr
7	Stem	Stainless steel EN 1.4021 2Cr13
8	Handweel	Ductile iron EN-JS1025 (GGG40.3)

Specifications	
Standart:	DIN 3202 F1
Flange standard:	EN1092-2
Face to face standard:	EN558, Series 1
Bonnet connection:	Bolted
Execution:	Straight
Connection type:	Flanged
Operation:	Handwheel
Actuation:	Multiturn
Tmax	From -29 °C to 425°C

Dn	Pressure rating	Connection	L	D	P	N x d	H	M	Weight (kg)
15	16	16	130	95	65	4 x 14	165	120	4
20	16	16	150	105	75	4 x 14	165	120	4,5
25	16	16	160	115	85	4 x 14	180	140	5,6
32	16	16	180	140	100	4 x 18	180	140	7
40	16	16	200	150	110	4 x 18	215	160	11

ИНКОВЕС ЕООД промишлена спирателна и регулираща арматура

тел. 052 725 370, 371, 372; моб.: 0886 400 992
факс.: 052 511 246 e-mail: office@incoves.com
www.incoves.com
Адрес: Централен офис - складова база
Варна, Западна промишлена зона, ул. "Перун" 1

07/12/2024

GLOBE VALVE CAST STEEL STRAIGHT DIN 3202 F1, PN 16

Материал steel 1.0619; DIN GS-C25
Налягане PN 16
Размер DN 15 - 200

Dn	Pressure rating	Connection	L	D	P	N x d	H	M	Weight (kg)
50	16	16	230	165	125	4 x 18	230	160	13
65	16	16	290	185	145	4 x 18	245	180	19
80	16	16	310	200	160	8 x 18	295	210	25
100	16	16	350	220	180	8 x 18	325	225	35
125	16	16	400	250	210	8 x 18	360	250	58
150	16	16	480	285	240	8 x 22	425	300	80
200	16	16	600	340	295	12 x 22	505	400	150

тел. 052 725 370, 371, 372; моб.: 0886 400 992 Адрес: Централен офис - складова база
факс.: 052 511 246 e-mail: office@incoves.com Варна, Западна промишлена зона, ул. "Перун" 1
www.incoves.com